DH-IPC-PDW31259-A180-AS-PV

2x6MP TiOC Duo Splicing Fixed-focal Eyeball WizSense Network Camera

Launched by Dahua Technology, WizSense is a series of AI products and solutions that adopt independent AI chip and deep learning algorithm. It focuses on human and vehicle with high accuracy, enabling users to fast act on defined targets. Based on Dahua's advanced technologies, WizSense provides intelligent, simple and inclusive products and solutions.

Series Overview

Dahua WizSense 3 Series Network Camera greatly saves on bandwidth and storage space through its AI Coding technology. Driven by its advanced deep learning algorithms, the camera supports intelligent functions such as perimeter protection, smart motion detection (SMD), AcuPick, and AI SSA (AI Scene Self-adaptation), making it easy and convenient to use. Starlight technology and its large aperture lens also allow the camera to produce clear, vivid images even in poor lighting conditions.

Functions

Xinghan Large-Scale AI Models-Vision

Xinghan Large-Scale AI Models-Vision seamlessly expands the storage and operational capacity of algorithmic models through the powerful integration of edge AI model algorithms and NPU computing power. Engineered with a lightweight transformer architecture and enhanced by model distillation and quantization techniques, it optimizes the computing power consumption of ViT operators. This enables the system to collaborate on multiple tasks simultaneously through joint inference between small and large models optimized for edge devices.

- 1/2.5" CMOS image sensor, high definition image.
- Outputs max 12 MP (5000 × 2500)@20 fps.
- H.265 codec, high compression rate, ultra-low bit rate.
- Built-in multi-core light, the max IR distance is 30 m and the max warm light distance is 30 m.
- ROI, Super AI Coding (H.265/H.264), flexible coding, applicable to various bandwidth and storage environments.
- WDR, 3D NR, HLC, BLC, digital watermarking, applicable to various monitoring scenes.
- Intelligent monitoring: Intrusion, tripwire (the two functions support the classification and accurate detection of vehicle and human), stay detection, loitering detection; face detection (full image).
- Abnormality detection: Motion detection, privacy masking, scene changing, audio detection, no SD card, SD card full, SD card error, network disconnection, IP conflict, illegal access, and voltage detection.
- Alarm: 1 in, 1 out; audio: 1 in, 1 out; supports max 512 GB Micro SD card; built-in dual Mic; 1-ch speaker; supports two-way talk.
- 12 VDC/PoE power supply.
- IP67 protection.
- Sound and light alarm (red and blue lights).
- SMD 4.0.
- Supports one-tap arming and disarming.
- SMD area can be set in warm light areas that support triggering alarms.
- EPTZ: Enlarge and track the targets of intelligent alarms.

Perimeter Protection

With deep learning algorithm, Dahua Perimeter Protection technology can recognize human and vehicle accurately. In restricted area (such as pedestrian area and vehicle area), the false alarms of intelligent detection based on target type (such as tripwire, intrusion, fast moving, parking detection, loitering detection and gathering detection) are largely reduced.

Siren and Light Active Deterrence

Dahua siren and light active deterrence network camera supports the light alarm and voice alarm when perimeter event occurs, to realize the deterrence and effective intervention. The camera is built in multiple voices for selection, and supports customized voice importing.

Super AI Coding

With advanced AI object detection and scene recognition technology, Super AI Coding integrates ROI, BAE, and DFE to achieve higher encoding efficiency than H.265 and H.264 while effectively reducing storage and transmission costs without compromising video quality.

Protection (IP67, Wide Voltage)

IP67: The camera passes a series of strict test on dust and soak. It has dust-proof function, and the enclosure can work normally after soaking in 1 m deep water for 30 minutes.

Wide voltage: The camera allows ±30% (for some power supplies) input voltage tolerance (wide voltage range), and it is widely applied to outdoor environment with instable voltage.

Technical Specification

Camera

Image Sensor	1/2.5" CMOS
Max. Resolution	5000 (H) × 2500 (V)
Scanning System	Progressive
Electronic Shutter Speed	Auto/Manual 1/3 s–1/100,000 s
Min. Illumination	0.002 lux@F1.0 (Color, 30 IRE) 0.0002 lux@F1.0 (B/W, 30 IRE) 0 lux (Illuminator on)
S/N Ratio	>56 dB
Illumination Distance	2.8 mm: Up to 30 m (98.43 ft) (IR) Up to 30 m (98.43 ft) (Warm light)
Illuminator On/Off Control	Auto;Manual
Illuminator Number	4 (Multi-core (IR + warm) light)
Angle Adjustment	Pan: 0° to 355° Tilt: 0° to 77° Rotation: 0° to 355°

Lens

Lens Type	Fixed-focal
Lens Mount	M12
Focal Length	2.8 mm
Max. Aperture	F1.0
Field of View	2.8 mm: H: 180°; V: 78°
Iris Control	Fixed
Close Focus Distance	2.8 mm: 1.4 m (4.59 ft)

DORI Distance	Lens	Detect	Observe	Recognize	Identify
	2.8 mm	59.6 m (195.54 ft)	23.8 m (78.08 ft)	11.9 m (39.04 ft)	6.0 m (19.69 ft)

*DORI (Detect, Observe, Recognize, Identify) is a standard system (EN-62676-4) for defining the ability of a person viewing the video to distinguish persons or objects within a covered area. The numbers in this table do not reflect intelligent function distances. For intelligent function distances, refer to installation and commissioning manual/project design tool.

Intelligence

IVS (Perimeter Protection)	Intrusion, tripwire (the two functions support the classification and accurate detection of vehicle and human), stay detection, loitering detection. Offers Perimeter Protection Large-Scale AI Models to extend the target detection range and reduce the rate of false alarm.
SMD	SMD 4.0
AcuPick	Uses deep learning algorithms and works with back-end devices to accurately match targets, such as people, animals and motor vehicles, and search through live and recorded videos to quickly locate targets.
Face Detection (Full Image)	Face detection; snapshot; snapshot optimization; optimal face snapshot upload; face exposure; face snapshot set as face or one-inch photo; snapshot strategies (real-time snapshot, quality priority and optimization snapshot); face angle filter; optimization duration setting.
Smart Search	Works together with Smart NVR to perform refine intelligent search, event extraction and merging to event videos.

Video

Video Compression	H.265; H.264; H.264H; H.264B; MJPEG (Only supported by sub stream)
AI Coding	Super AI Coding (H.265); Super AI Coding (H.264) *Includes smart codec technology, Smart H.265+ and Smart H.264+
Video Frame Rate	Main stream: 5000 × 2500@(1–20 fps) Sub stream: 1200 × 536@(1–20 fps) Third stream: 1920 × 860@(1–20 fps) *The values above are the max frame rates of each stream; for multiple streams, the values will be subjected to the total encoding capacity.
Streaming Capability	3 streams
Resolution	12M (5000 × 2500); 1920 × 860; 1200 × 536; 960 × 432; D1 (704 × 576/704 × 480)
Bit Rate Control	VBR;CBR;ABR
Video Bit Rate	H.264: 6 kbps–32768 kbps; H.265: 6 kbps–32768 kbps
Day/Night	Auto(ICR)/Color/B/W
BLC	Yes
HLC	Yes
WDR	120 dB
Scene Self-adaptation (SSA)	Yes
White Balance	Auto; Natural; Street Lamp; Outdoor; Manual; Regional Custom
Gain Control	Manual;Auto
Noise Reduction	3D NR
Motion Detection	OFF/ON (4 areas, rectangular)
Region of Interest (RoI)	Yes (4 areas)
Smart Illumination	Yes
Smart Dual Light	Yes
Defog	Yes

Privacy Masking	8 areas

Audio

Built-in MIC	Yes, built-in dual Mic
Built-in Speaker	Yes, built-in dual speaker;Max power consumption: 2 W; max sound level at 10 cm: 110 dB * Test results from laboratory
Audio Compression	PCM; G.711a; G.711Mu; G.726; G.723

Alarm

Alarm Event	No SD card; SD card full; SD card error; network disconnection; IP conflict; illegal access; motion detection; video tampering; tripwire; intrusion; loitering detection; stay detection; face detection (full image); scene changing; audio detection; voltage detection; defocus detection; SMD; security exception

Network

Network Port	RJ-45 (10/100/1000 Base-T)
SDK and API	Yes
Network Protocol	IPv4; IPv6; HTTP; TCP; UDP; ARP; RTP; RTSP; RTCP; RTMP; SMTP; FTP; SFTP; DHCP; DNS; DDNS; QoS; UPnP; NTP; Multicast; ICMP; IGMP; NFS; SAMBA; PPPoE; SNMP; P2P; Bonjour; Auto Registration
Interoperability	ONVIF (Profile S & Profile G & Profile T & Profile M); CGI
User/Host	20 (Total bandwidth: 64 M)
Storage	FTP; SFTP; Micro SD card (support max. 512 GB); NAS
Browser	IE Chrome Firefox
Management Software	Smart PSS Lite; DSS; DMSS; DoLynk Care
Mobile Client	iOS;Android
Security	Digest;WSSE;Account lockout;Security logs;IP/MAC filtering;Generation and importing of X.509 certification;syslog;HTTPS;802.1x;Trusted boot;Trusted execution;Trusted upgrade;Session security;Security warning

Function

Light Warning	Light Warning: Red and blue light warning Flash/Solid on duration: 5 s–30 s Flash frequency: high, medium, low
Sound Warning	Sound Warning: Offers 11 sound alarms and supports importing custom sound alarms Sound: 0-100 Play times can be set from 1 to 10

Certification

Certifications	CE-LVD: EN62368-1; CE-EMC: Electromagnetic Compatibility Directive 2014/30/EU

Port

Audio Input	1 channel (RCA port)
Audio Output	1 channel (RCA port)
Alarm Input	1 channel in: supports wet contact connection (max load 5 mA 3–5 VDC); supports dry contact connection
Alarm Output	1 channel out: dry contact, max load 1,000 mA 30 VDC/500 mA 50 VAC

Power

Power Supply	12 VDC (±30%); PoE+ (802.3at)
Dual Power Backup	When the power adapter and PoE provide power at the same time, disconnect one of them. The device will continue to work, but will not restart.
Power Consumption	Basic: 4.9 W (12 VDC); 6.8 W (PoE); Max.: 13.3 W (12 VDC); 16.1 W (PoE) (H.265 + WDR + warm light + sound and light active deterrence + intelligence on)

Environment

Operating Temperature	–40 °C to +60 °C (–40 °F to +140 °F)
Operating Humidity	≤95% (RH), non-condensing
Storage Temperature	–40 °C to +60 °C (–40 °F to +140 °F)
Storage Humidity	≤95% (RH), non-condensing
Protection	IP67
Anti-corrosion Level	Basic Protection *The products are designed for general use and are applicable even in areas with no specific requirements for anti-corrosion protection.

Structure

Casing Material	Metal
Product Dimensions	135.2 mm × Φ122.0 mm (5.32" × Φ4.80")
Net Weight	0.99 kg (2.18 lb)
Gross Weight	1.15 kg (2.54 lb)

Ordering Information

Type	Model	Description
IP CAMERA	DH-IPC-PDW31259-A180-AS-PV	2x6MP TiOC Duo Splicing Fixed-focal Eyeball WizSense Network Camera
Accessories (Optional)	DH-PFB220C	Ceiling Mount Bracket
	DH-PFA109	Mount Adapter
	DH-PFA151	Corner Mount Bracket
	DH-PFB305W	Wall Mount Bracket
	DH-PFA150	Pole Mount Bracket
	DH-PFA156	Pole Mount Bracket
	DH-PFB2203W	Wall Mount Bracket
	DH-PFA137	Junction Box
	DH-PFM320-020EN	DC12V 2A Power Adapter
	DH-PFM320D-EN	DC12V 2A Power Adapter
	PFM900-E	Integrated Mount Tester
	DHI-TF-P100/512GB	MicroSD Card

Accessories

Optional:

DH-PFB220C
Ceiling Mount Bracket

DH-PFA109
Mount Adapter

DH-PFA151
Corner Mount Bracket

DH-PFB305W
Wall Mount Bracket

DH-PFA150
Pole Mount Bracket

DH-PFA156
Pole Mount Bracket

DH-PFB2203W
Wall Mount Bracket

DH-PFA137
Junction Box

DH-PFM320-020EN
DC12V 2A Power Adapter

DH-PFM320D-EN
DC12V 2A Power Adapter

PFM900-E
Integrated Mount Tester

DHI-TF-P100/512GB
MicroSD Card

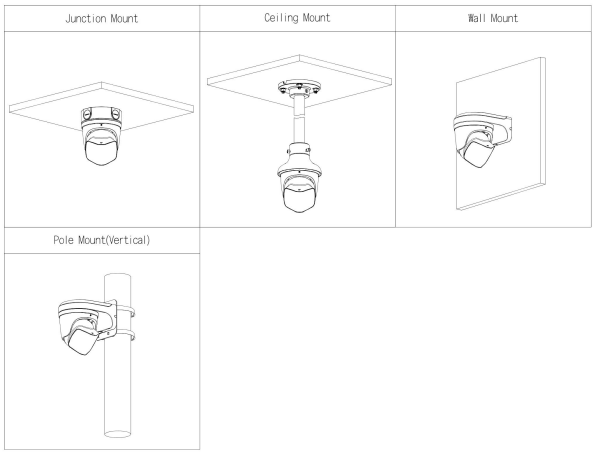

Dimensions (mm[inch])

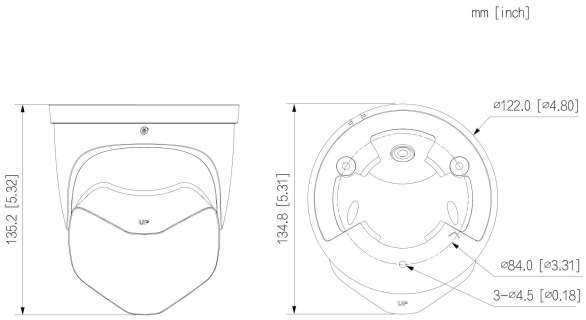

©2026 Dahua. All rights reserved. Design and specifications are subject to change without notice.
Pictures in the document are for reference only, and the actual product shall prevail.